THE CONTRACTOR SHALL VERIFY ALL JOB CONDITIONS AND DIMENSIONS BEFORE BEGINNING WORK.

OPENING SCHEDULE LEGEND

OPENING SHAPE LEGEND:

AR	ARCHED
HR	HALF-ROUND
RC	RECTANGULAR
OV	OVAL

DOOR SCHEDULE LEGEND

DOOR HARDWARE GROUP LEGEND:

HW23 (3) HINGE SETS
(1) PRIVACY LOCKSET
(1) DOOR STOP

HW24 (6) HINGE SETS
(1) PRIVACY LOCKSET
(2) DOOR STOPS
(1) STRIKE PIN SET

HW31 (4) HINGE SETS
(1) LATCHSET
(1) DOOR STOP

HW32 (8) HINGE SETS
(1) LATCHSET
(2) DOOR STOPS
(1) STRIKE PIN SET

HW33 (3) HINGE SETS
(1) LATCHSET
(1) DOOR STOP

HW34 (6) HINGE SETS
(1) LATCHSET
(2) DOOR STOPS
(1) STRIKE PIN SET

HW11 (4) HINGE SETS
(1) ENTRY LOCKSET
(1) DEADBOLT
(1) DOOR STOP
(1) THRESHOLD
(1) WEATHERSTRIP

HW12 (8) HINGE SETS
(1) ENTRY LOCKSET
(1) DEADBOLT
(2) DOOR STOPS
(1) THRESHOLD
(1) WEATHERSTRIP
(1) STRIKE PIN SET

HW13 (1) SLIDER LOCKSET
(1) DEADBOLT
(2) DOOR STOPS
(1) THRESHOLD
(1) WEATHERSTRIP

HW21 (4) HINGE SETS
(1) PRIVACY LOCKSET
(1) DOOR STOP

HW22 (8) HINGE SETS
(1) PRIVACY LOCKSET
(2) DOOR STOPS
(1) STRIKE PIN SET

GLAZING LEGEND:

SG	SINGLE GLAZED
DG	DUAL GLAZED
LE	LOW "E"
TEMP	TEMPERED GLASS
LAM	LAMINATED SAFETY GLASS

DOOR FRAME TYPE LEGEND:

WD	WOOD: PAINT GRADE
SOV	SOLID VINYL
VCW	VINYL CLAD WOOD
ACW	ALUMINUM CLAD WOOD
MANF	PER MANUFACTURER
AL	ANODIZED ALUMINUM

DOOR/FRAME FINISH LEGEND:

O (AS SELECTED BY OWNER)

DOOR TYPE LEGEND:

EOC	EXT-OPENING-CASED
EP	EXT-PAIR
EP6P	EXT-PAIR-6-PANEL
EPBFL	EXT-PAIR-BIFOLD-FULL-LITE
EPFL	EXT-PAIR-FULL-LITE
EPFLA	EXT-PAIR-FULL-LITE-ARCHED
ES	EXT-SINGLE
ES6P	EXT-SINGLE-6-PANEL
ESA	EXT-SINGLE-ARCHED
ESFL	EXT-SINGLE-FULL-LITE
ESFLA	EXT-SINGLE-FULL-LITE-ARCHED
EXO6FL	EXT-XO-SINGLE-FULL-LITE
ISPS	INT-BYPASS-SLIDING
IP	INT-PAIR
IP3P	INT-PAIR-3-PANEL
IP6P	INT-PAIR-6-PANEL
IS	INT-SINGLE
IS6P	INT-SINGLE-6-PANEL
IS6PP	INT-SINGLE-6-PANEL-POCKET
ISPP	INT-SINGLE-POCKET
RU15P	ROLL-UP-15-PANEL
RU20P	ROLL-UP-20-PANEL
RU20PA	ROLL-UP-15 PANEL-ARCHED
RU15PA	ROLL-UP-20-PANEL-ARCHED

WINDOW SCHEDULE LEGEND

WINDOW FRAME LEGEND:

SOV	SOLID VINYL
VCW	VINYL CLAD WOOD
ACW	ALUMINUM CLAD WOOD
SFW	STEEL FRAME
FGW	FIBERGLASS FRAME
ALW	ALUMINUM FRAME

GLAZING LEGEND:

SG	SINGLE GLAZED
DG	DUAL GLAZED
LE	LOW "E"
TEMP	TEMPERED GLASS
LAM	LAMINATED SAFETY GLASS

WINDOW TYPE LEGEND:

SCM	SINGLE-CASEMENT
DCM	DOUBLE-CASEMENT
SCM-A	SINGLE-CASEMENT-ARCHED
ADCM	DOUBLE-CASEMENT-ARCHED
FIX	FIXED-PANEL
FIX-A	FIXED-ARCHED
FIX-HR	FIXED-HALF-ROUND
FIXELP	FIXED-ELLIPSE-PANEL
FIXRND	FIXED-ROUND-PANEL
SGL	SINGLE-GLIDER
DGL	DUAL-GLIDER
SGL-A	SINGLE-GLIDER-ARCHED
DGL-A	DUAL-GLIDER-ARCHED
SHG	SINGLE HUNG
DHG	DOUBLE HUNG
LVR-P	LOUVERED-PANEL

ROOM FINISH SCHEDULE LEGEND

FLOORING FINISH LEGEND:

CR	CARPET (AS SELECTED BY OWNER) (AS SELECTED BY OWNER)
CT	CERAMIC TILE (AS SELECTED BY OWNER)
CN	CONCRETE WITH SMOOTH FINISH
HW	DECORATIVE WOOD (AS SELECTED BY OWNER)
ST	STONE TILE (AS SELECTED BY OWNER)
ST2	STONE TILE (SHOWER AREA, AS SELECTED BY OWNER) OVER MOISTURE BARRIER, CEMENT BACKER BOARD.
SV	SHEET VINYL (AS SELECTED BY OWNER)
SC	STAINED/TEXTURED CONCRETE (AS SELECTED BY OWNER)

BASE/CROWN FINISH LEGEND:

CT	4" HIGH CERAMIC TILE (AS SELECTED BY OWNER)
HW	7" HIGH DECORATIVE WOOD (AS SELECTED BY OWNER)
MDF	6" HIGH MDF BASE BOARD (AS SELECTED BY OWNER)
ST	6" HIGH STONE TILE (AS SELECTED BY OWNER)
SV	4" HIGH INTERGAL SHEET VINYL COVE (AS SELECTED BY OWNER)
CM6	6" HIGH MDF CROWN MOULDING (AS SELECTED BY OWNER)

WALL AND CEILING FINISH LEGEND:

GB	5/8" THICK GYPSUM BOARD. IMPERFECT SMOOTH TEXTURE FINISH, PRIME AND 2-COAT PAINT (TYP).
CRG	5/8" THICK MOISTURE RESISTANT GYPSUM BOARD; TAPE, MOISTURE BARRIER, MORTAR BASE AND CERAMIC TILE FINISH.
SRG	5/8" THICK MOISTURE RESISTANT GYPSUM BOARD; TAPE, MOISTURE BARRIER, MORTAR BASE AND STONE TILE FINISH.
XGB	ONE HOUR SEPARATION: WALL TO HAVE (1) LAYER AND CEILINGS TO HAVE (2) LAYERS OF 5/8" TYPE "X" GYPSUM BOARD.
P	PAINT (3-COAT) WALL SURFACE.
EXT	EXTERIOR WALL/CEILING FINISH - SEE EXTERIOR ELEVATIONS

FLOOR LEVEL-1

OPENING SCHEDULE

OPENING NO.	ROOM NUMBER	OPENING SHAPE	RISE	OPENING SIZE WIDTH	OPENING SIZE HEIGHT	HEAD HEIGHT	DETAILS HEAD	DETAILS JAMB	DETAILS SILL	NOTES

DOOR SCHEDULE

DOOR NO.	ROOM NUMBER	DOOR WIDTH	DOOR HEIGHT	DOOR THICK	DOOR MATERIAL	DOOR GLAZING	FRAME TYPE	FRAME MAT	DETAILS HEAD	DETAILS JAMB	DETAILS SILL	LISTING	HARDWARE	NOTES
100	R101	5'-0"	6'-8"	1 3/4"	WOOD	--	EPFL	WOOD	5/A4.11	5/A4.11	--	--	--	NEW

WINDOW SCHEDULE

WINDOW NO.	ROOM NUMBER	WINDOW (VERIFY ROUGH OPENING W/ MANF) WIDTH	HEIGHT	GLAZING	FRAME	TYPE	DETAILS HEAD	JAMB	SILL	HEAD HEIGHT	NOTES
100	R101	3'-0"	3'-6"	--	VINYL	SGL	4/A4.11	--	4/A4.11	6'-0"	NEW
101	R101	3'-0"	3'-6"	--	VINYL	SGL	4/A4.11	--	4/A4.11	6'-0"	NEW
102	R101	3'-0"	1'-6"	--	VINYL	FIX-HR	4/A4.11	--	4/A4.11	8'-0"	NEW
103	R101	3'-0"	3'-6"	--	VINYL	SHG	4/A4.11	--	4/A4.11	6'-0"	NEW
104	R101	4'-0"	1'-6"	--	VINYL	FIX-HR	4/A4.11	--	4/A4.11	8'-4"	NEW

ROOM FINISH SCHEDULE

ROOM NUMBER	ROOM NAME	FLOOR FINISH	BASE	WALLS NORTH	WALLS EAST	WALLS SOUTH	WALLS WEST	CEILING MAT	CEILING HEIGHT	ROOM SIZE WIDTH	ROOM SIZE LENGTH	NET AREA	REMARKS
R101	STORE	CN	--	--	--	--	--	--	7'-1"	13'-4"	15'-4"	204 SF	

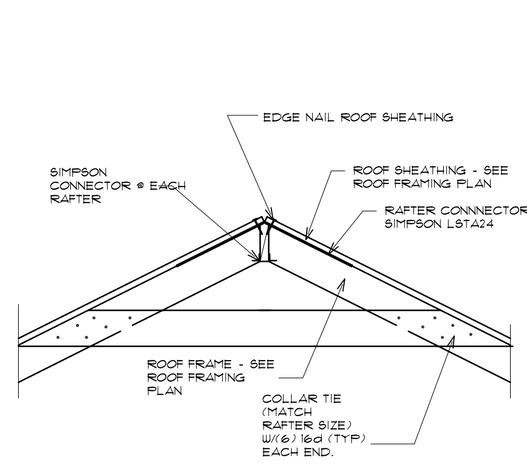

ROOF RIDGE BEAM & COLLAR TIE DETAIL — SCALE: @ 4" 8" 12" — 3

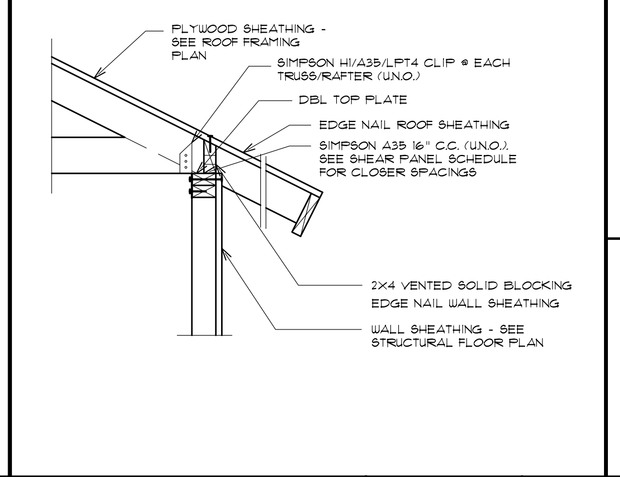

SHEAR TRANSFER DETAIL — SCALE: N.T.S. — 2

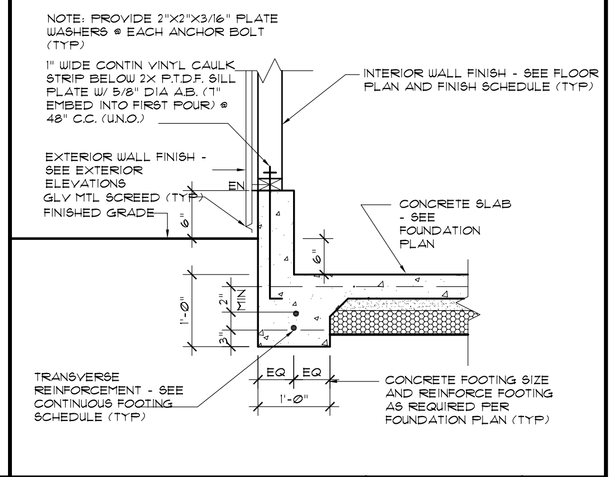

SLAB FOOTING DETAIL — SCALE: @ 4" 8" 12" — 1

These drawings are instruments of service and are the property of Sacramento Design Group. All design information contained in these drawings are for use on the specified project and shall not be used otherwise without the expressed written permission of Sacramento Design Group.

A.P.N. 201-0470-004

Project Owner:
DAVID WEBB

5511 NORTHBOROUGH DRIVE
SACRAMENTO, CA 95835
TEL: (916) 214-9322
FAX: ---

SACRAMENTO DESIGN GROUP
3301 SUNRISE BLVD., RANCHO CORDOVA, CA 95742
PHONE: (877) 581-0866 FAX: (877) 581-0866
www.SacramentoDesignGroup.com

TITLES:

SCHEDULES LEVEL-1

CONST MODIFICATION #2	
CONST MODIFICATION #1	
APPROVED PERMIT SET	--
PLAN CHECK PC#3	--
PLAN CHECK PC#2	--
PLAN CHECK PC#1	--
CONSTRUCTION DOCUMENTS	2008.12.18
DESIGN DEVELOPMENT	---
SCHEMATIC DESIGN	2008.12.15

SHEET:

A4.11

SHEET: OF -4- SHEETS

CAD FILE: C:\-PCD\-PCD PROJECTS\2008\2008PCD\5511 NORTHBOROUGH DRIVE\Sheets\02ARCHITECTURAL\A4.11 SCHEDULES.dwg DATE PLOTTED: Thursday, Dec 18, 2008

SACRAMENTO DESIGN GROUP LIMITS ITS RESPONSIBILITY TO INFORMATION REPRESENTED THEREIN AND THE INTENDED USE THEREOF AND ASSUMES NO RESPONSIBILITY FOR ACTUAL AS-BUILT CONDITIONS.